CABLE CLAMPS

KS SERIES

100% MADE IN GERMANY

PROPERTIES

Resistance to:	Ultraviolet rays, ozone, mineral oils, fuels, salts, alkalis, alcohol, hydrocarbons, ketones, ether, termites and radioactive rays*
Flame resistance:	UL94 5VA (IEC 60695-11-20) UL94 V-0 (IEC 60695-11-10) IEC 61914 following IEC 60695-11-5 Classification following DIN 5510, part 2 Flammability class: S3
Thermal expansion:	0.01% per 10°C temperature increase
Tensile strength:	120 N/mm²
Flexural strength:	210 N/mm²

TEMPERATURE RANGE

Ambient temperature:	down to -60°C*
Continuous operation:	up to 120°C
Permitted short-term heating:	up to 220°C
Operation life:	more than 40 years of maintenance- and failure-free operation

MATERIAL

High-grade polyamide, fibreglass-reinforced, coloured black, with special UV protection, fully recyclable, self-extinguishing, low-smoke, zero halogen (LSZH), non-toxic, non-corrosive, non-metallic, non-magnetic

Applications:

For trefoil formation and stacked fastening of single- and multi-core cables. Universal application indoors and outdoors between -60°C and +120°C.

Outer diameter of cables:

22 mm to 46 mm

Dynamic resistance to short circuits:

13.000 N

Torque for tightening the fastening material:

Top part: 5 Nm**
Bottom part: 15 Nm

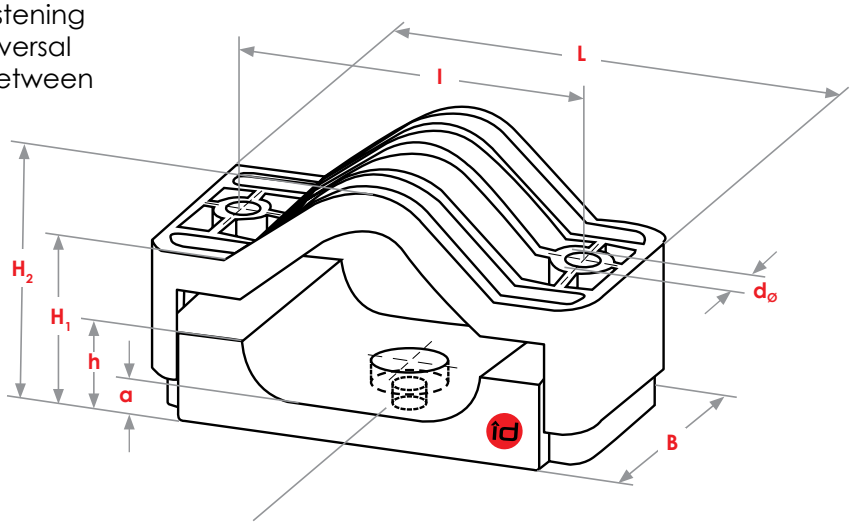

The assembly hole in the bottom part of the KS series allows a direct fastening to lattice, concrete and wooden masts, suitable for M10 rod threaded.

Dimensions in mm

Type	Dø	Dø++	L	B	l	H_1	H_2	h	a	dø	Screw thread
KS 25/36	25-36	22-33	150	80	110	55-75	77-97	33	17	12	M10/12
KS 33/46	33-46	30-43	170	80	130	55-85	95-116	33	15	12	M10/12

Dø: Outer cable diameter
Dø++: ~ with two Elastic Inlays

* For more information contact îd-Technik, please.
** Contact îd-Technik for trailing cables (EPDM, rubber, etc.), please.

îd-Technik GmbH, Hohe Strasse 34-36, 68526 Ladenburg, Germany,
Tel.: +49 (0) 6203 107 95 88, Fax: +49 (0) 6203 107 95 52, www.id-technik.com, info@id-technik.com

For further details, please contact îd-Technik. Technical changes and errors reserved. Date 06/2020
The information presented in these manuals is intended for the guidance of authorized users of the îd-Technik products.
Copyright law and intellectual property rights protect all of the content of the îd-Technik manuals and catalogues, including all text, drawings, pictures and other product representations. Reproduction, communication, or other use of this proprietary information is not permitted without prior written consent from îd-Technik GmbH.

STANDARD IEC 61914 îd-Technik Cable Clamps have been type-tested by accredited test institutes to the international standard IEC 61914.

Legal compliance

- Directive 2015/863/EU (RoHS)
- Regulation (EC) No. 1907/2006 (REACH regulation)

Constructional features

- Particularly high dynamic and mechanical strength and heat resistance due to special fibreglass-reinforced polyamide
- Safe restraint of dynamic forces of high short circuit currents, without damage to the cables, also for multiple short circuits
- Type-tested to IEC 61914 – cable cleats for electrical installations - reports from accredited institutes regarding dynamic short circuit currents, the fire-resistance of the material, and mechanical properties of the Cable Clamps are available
- Very low surface pressure on cables due to Cable Clamps' large contact area
- Universal application both indoor and outdoor in extreme climates such as deserts, tropics, high altitudes, arctic climate, coastal salt fogs, flooding and ozone due to special resistance to ageing, ultraviolet rays and ozone
- Easy to mount without special instruments and maintenance-free
- Fastening of Cable Clamps adaptable to all local conditions

Type-Tests to IEC 61914 on Series KS Cable Clamps approved results in highest classification

Classification	Test conditions	Approved results	Paragraph
Material: non-metallic	high-grade polyamide		6.1.2
Operating temperature	-60°C / +120°C	passed	6.2
Resistance to impact	-60°C, 5 kg at 400 mm height	very heavy	6.3.5
Lateral load test (N) – in x-direction – in y-direction	+120°C	11.000 N 19.000 N	6.4.1
Axial load test (N) – without Elastic Inlays – *with Elastic Inlays*	+120°C	1.000 N *1.250 N*	6.4.2
Dynamic resistance to short circuits (N) suited to withstand multiple short circuits	Peak short circuit current: 66,4 kA Cable Clamp spacing: 0,61 m	13.000 N	6.4.4
UV-resistance	high	passed	6.5.1
Flame propagation	1 x 30s, needle flame method	passed	10.1 (IEC 60695-11-5)
	2 x 10s, 50 W test flame method	V-0	UL 94 V (IEC 60695-11-10)
	5 x 5s, 500 W test flame method	5VA	UL 94 5V (IEC 60695-11-20)
	3 min	S3	DIN 5510

Installation with Elastic Inlays:

- As a cushion for elastic adjustment of cable diameter changes due to operational load changes and/or changes in the ambient temperature
- Precise cable fixation and absorption of weight forces, primarily on cables installed along inclines or attached to vertical surfaces where restraint of axial movement is essential
- Compensation of vibrations, e.g. in wind turbines, without reducing retention forces
- Expansion of the Clamp's clamping area, for cables with a smaller outer diameter

îd-Technik GmbH, Hohe Strasse 34-36, 68526 Ladenburg, Germany,
Tel.: +49 (0) 6203 107 95 88, Fax: +49 (0) 6203 107 95 52, www.id-technik.com, info@id-technik.com

For further details, please contact îd-Technik. Technical changes and errors reserved. Date 06/2020
The information presented in these manuals is intended for the guidance of authorized users of the îd-Technik products. Copyright law and intellectual property rights protect all of the content of the îd-Technik manuals and catalogues, including all text, drawings, pictures and other product representations. Reproduction, communication, or other use of this proprietary information is not permitted without prior written consent from îd-Technik GmbH.